Инструкция по сборке

ENGLISH

Specification of installation

In order to ensure safety use,please notice the following items:

- Read and understand the whole Specification.
- Suitable for the use of 220-240V and 50-60Hz.
- Please wear gloves as installment and avoid rot on the surface of plaetng.
- Must be installed on the fixed places and be checked annually.
- Please tum off the lighting source by soft cloth as cleaning prohibited to use of rotted detergent.
- Please connect with the local sales service center when there are any abnomality.

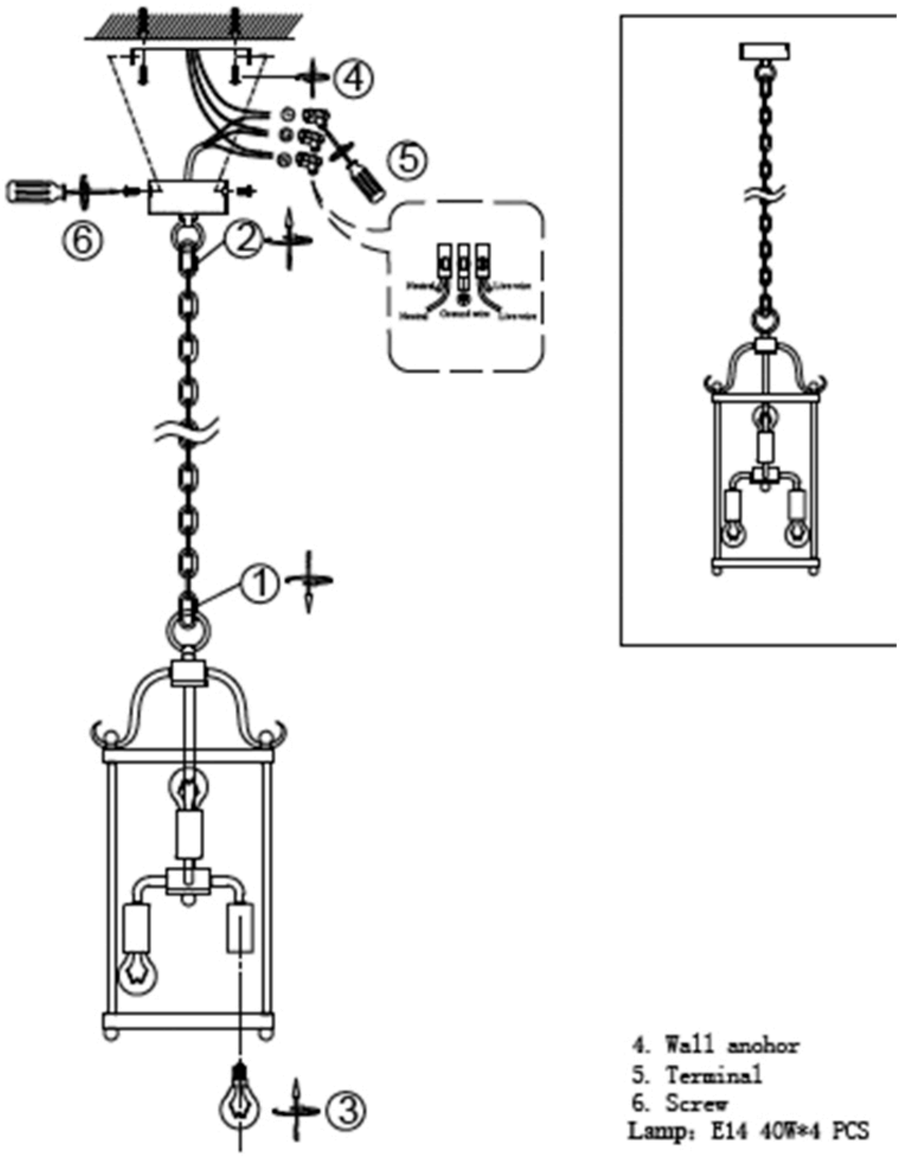

4. Wall anchor
5. Terminal
6. Screw

Lamp: E14 40W*4 PCS

Габаритные размеры

BASE SIZE:

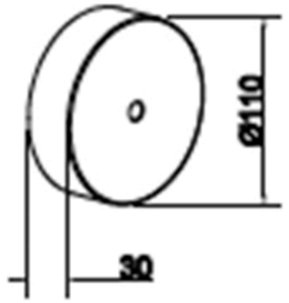

FIXTURE SIZE:

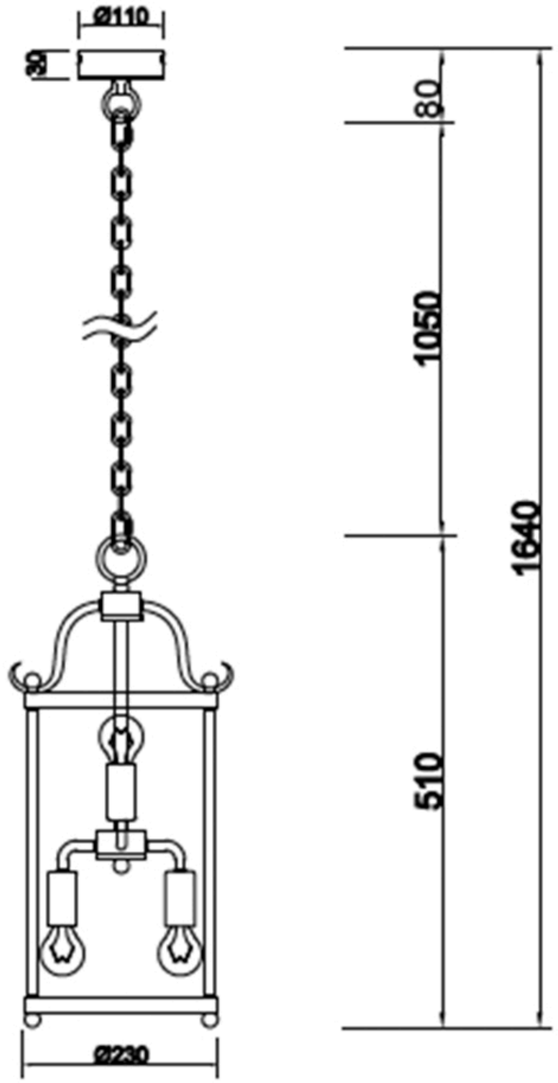

Наименование артикула: TADEO SP4 D200